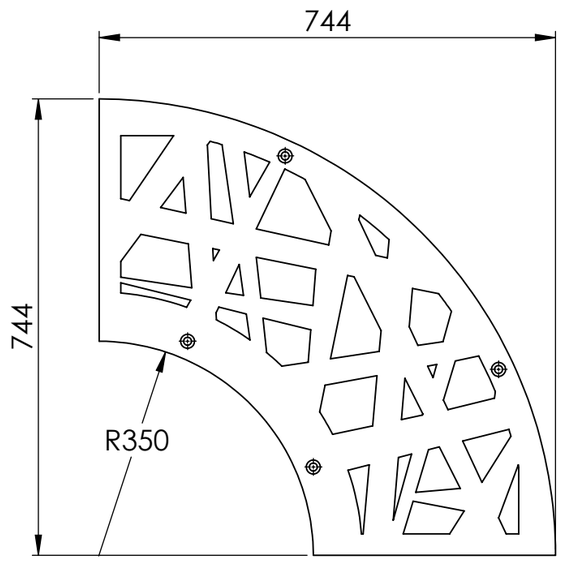

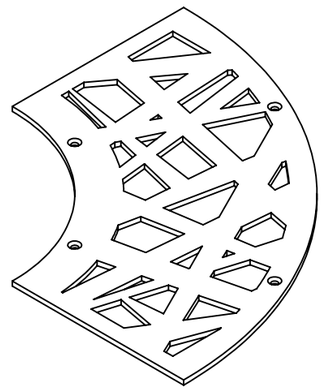

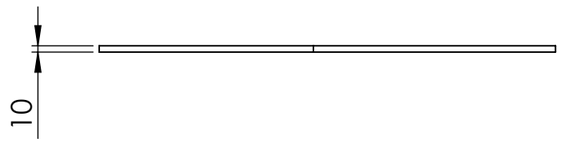

		DATE	
DRAWN	Sibren Nass	5-12-2019	
REVISION			

TITLE: SCTG R1500 P1

Drawing. SCTG R1490 Grate Sheet1 — A3

Color: -	Mass(kg):	SCALE:1:10	SHEET 1 OF 6