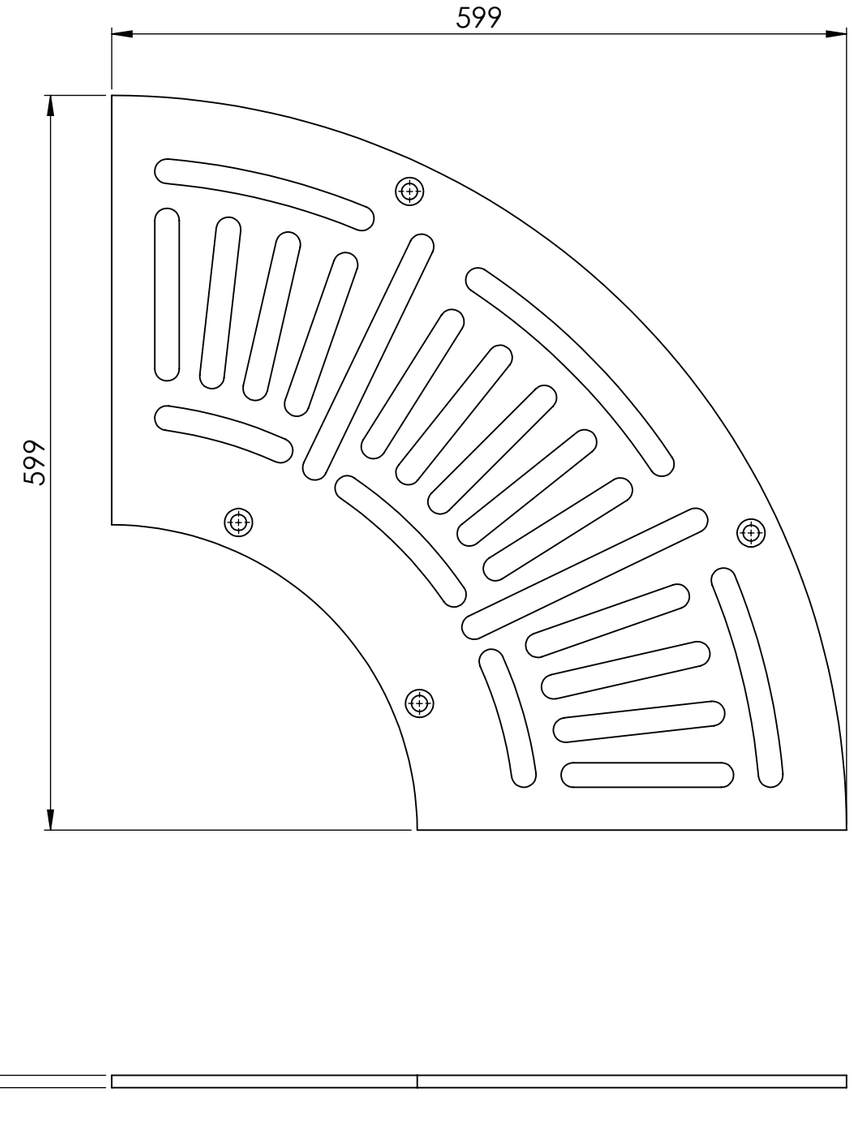

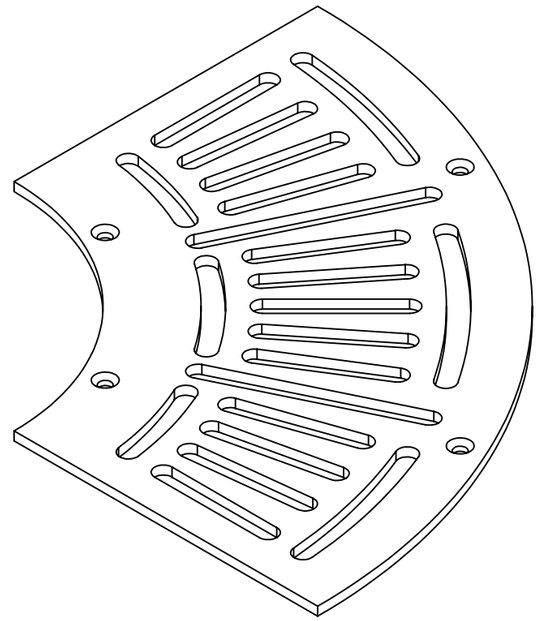

		DATE	
DRAWN	Sibren Nass	5-12-2019	
REVISION			

TITLE: SCTG R1200 P6

Drawing. SCTG R1200 Grate Sheet1

A3

Color:	-	Mass(kg):	SCALE:1:5

SHEET 6 OF 6