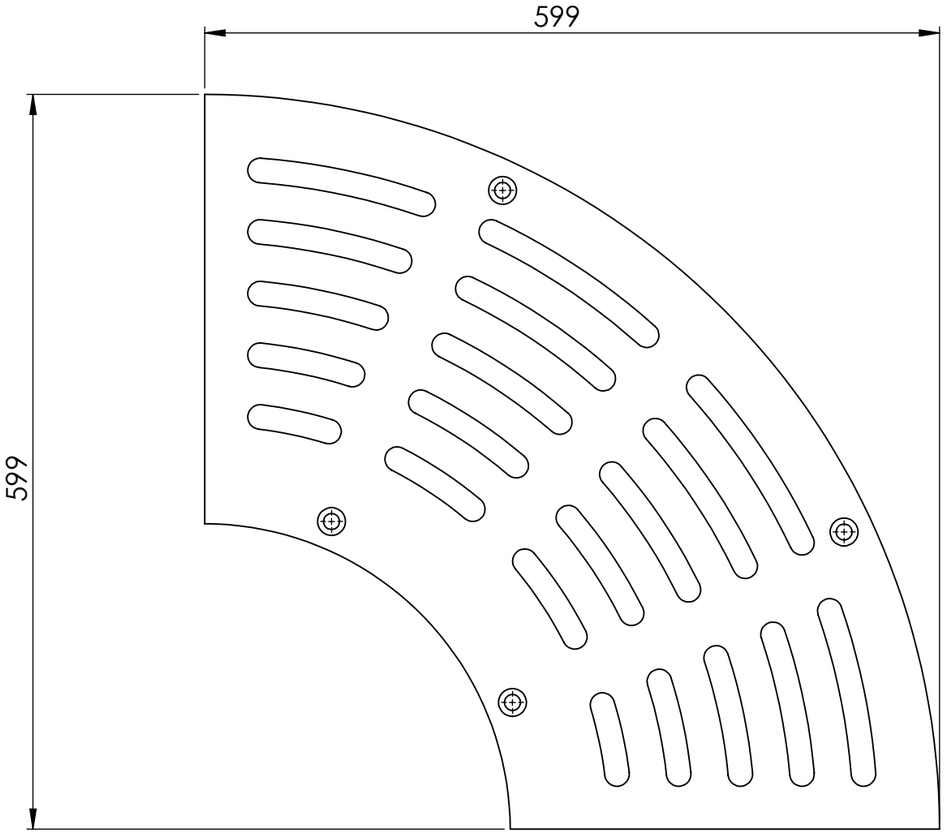

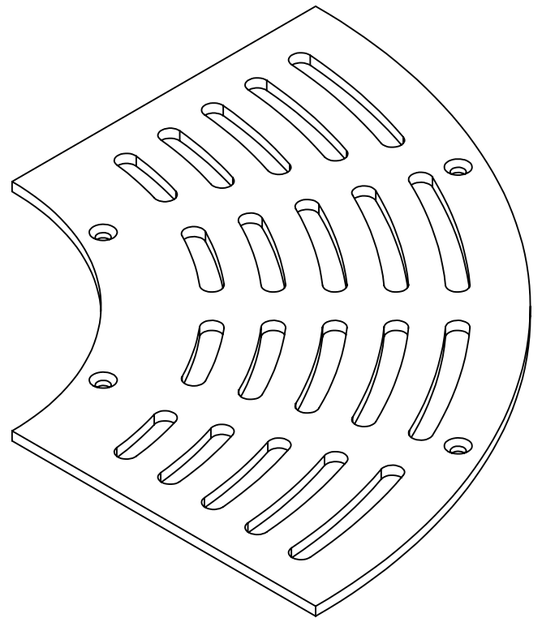

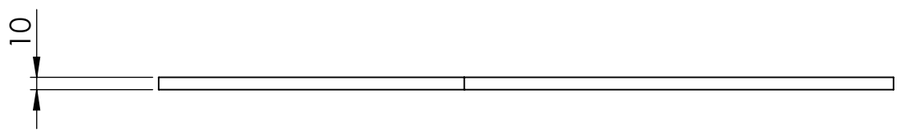

		DATE	
DRAWN	Sibren Nass	5-12-2019	
REVISION			

TITLE:

SCTG R1200 P5

Drawing. SCTG R1200 Grate Sheet1

A3

Color: -	Mass(kg):	SCALE:1:5	SHEET 5 OF 6