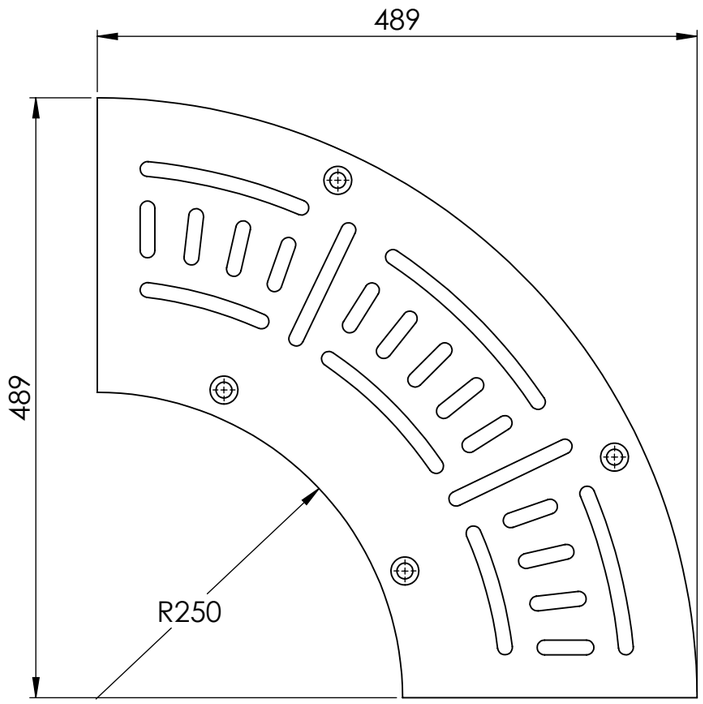

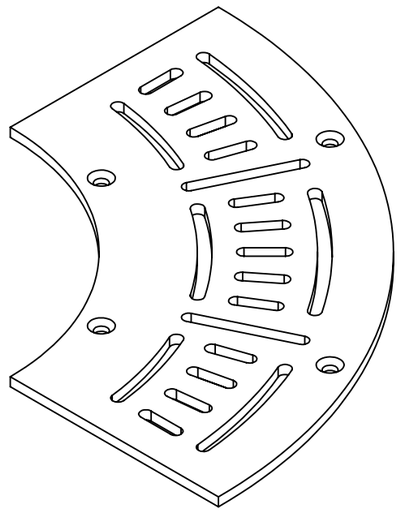

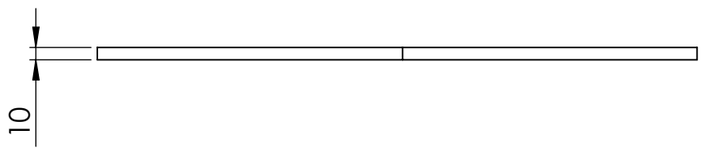

		DATE	
DRAWN	Sibren Nass	5-12-2019	
REVISION			

TITLE:

SCTG R980 P6

Drawing. SCTG R980 Grate Sheet1

A3

Color:	Mass(kg):	SCALE:1:5	SHEET 6 OF 6