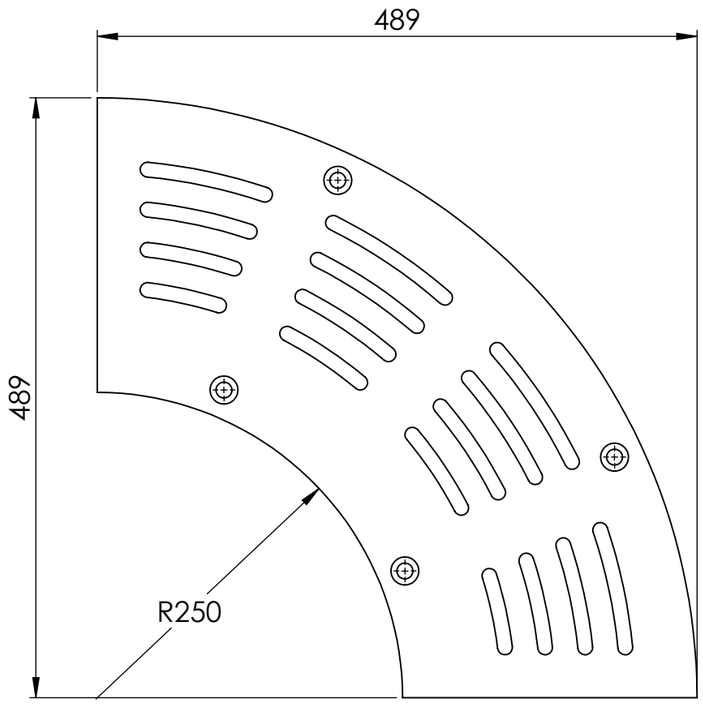

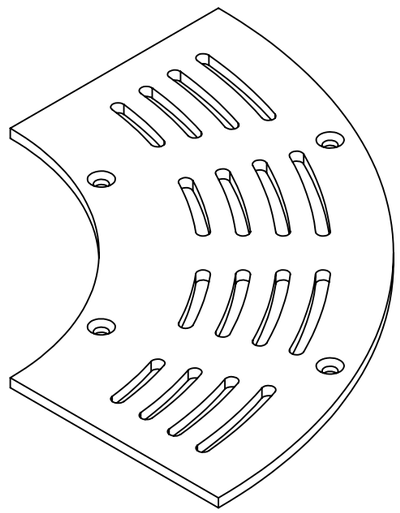

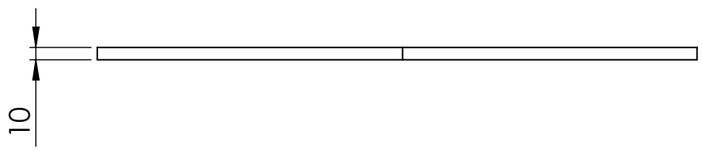

		DATE	
DRAWN	Sibren Nass	5-12-2019	
REVISION			

TITLE: SCTG R980 P5

Drawing. SCTG R980 Grate Sheet1 | A3

Color: | Mass(kg): | SCALE:1:5 | SHEET 5 OF 6