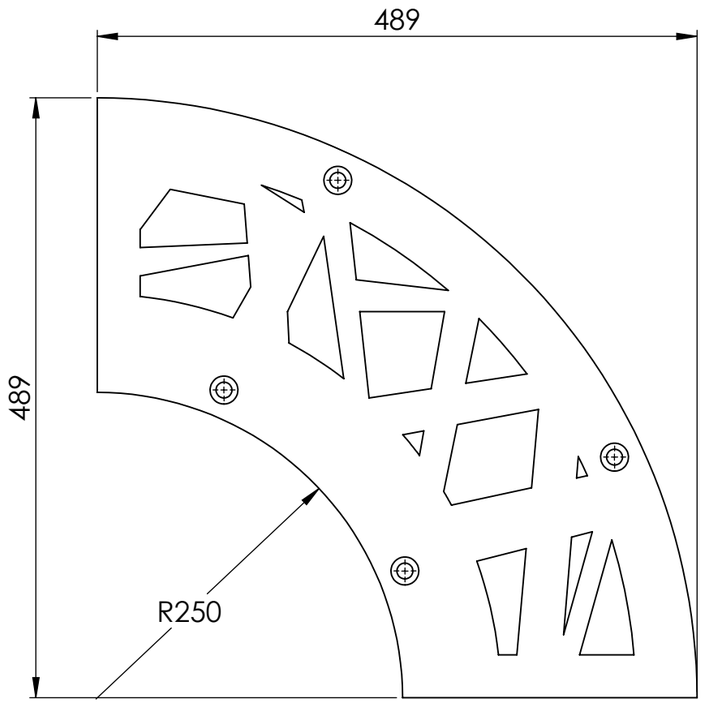

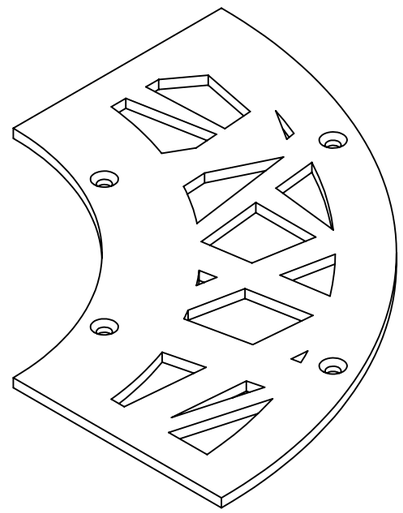

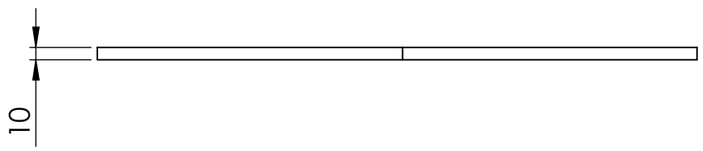

		DATE	
DRAWN	Sibren Nass	5-12-2019	
REVISION			

TITLE:

SCTG R980 P1

Drawing. SCTG R980 Grate Sheet1

A3

Color:

Mass(kg):

SCALE:1:5

SHEET 1 OF 6