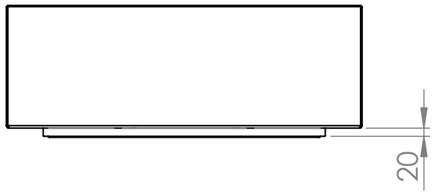

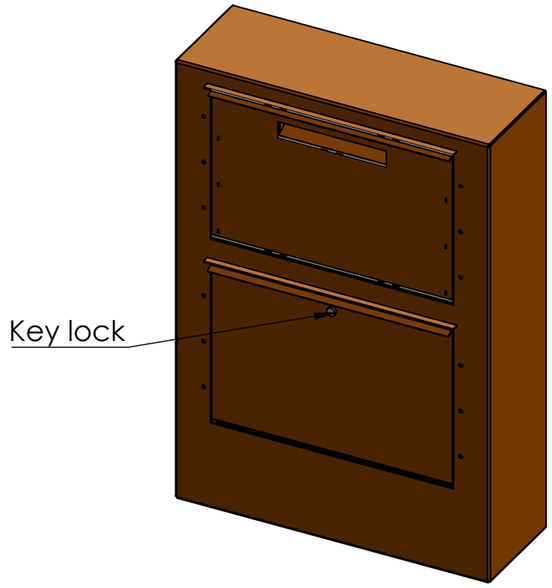

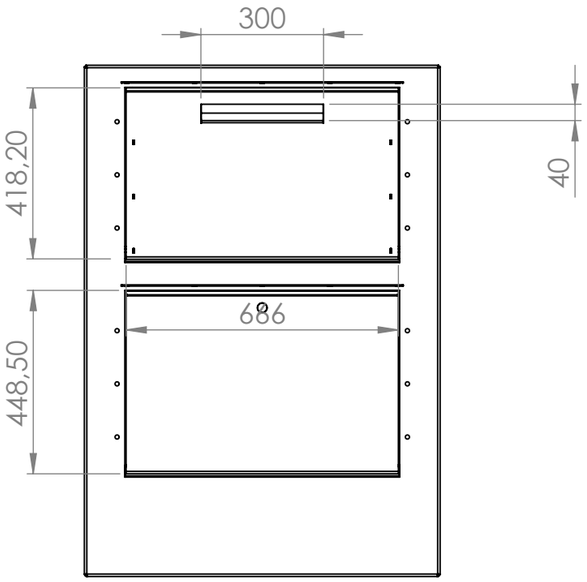

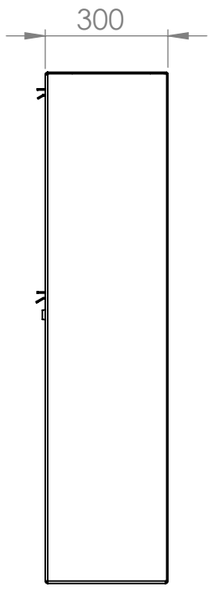

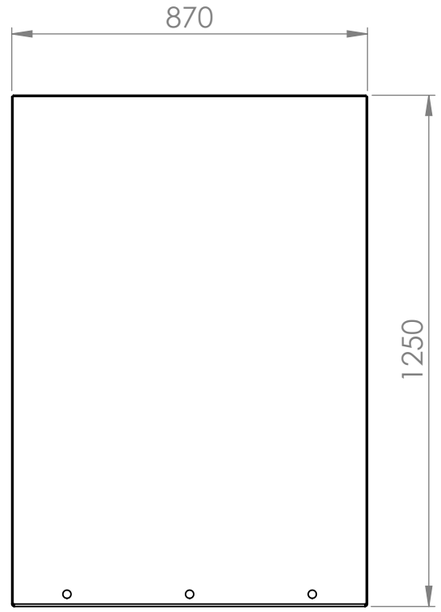

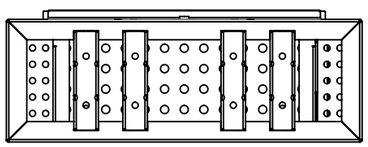

		DATE
DRAWN	Luuk van den Heuvel	24-6-2024
REVISION	Juul Janssen	16-1-2025

TITLE:

SCPPS1.2

Drawing.

SCPPS1.2

A3

Color: -

Mass (kg): **118.57**

SCALE:1:15

SHEET 1 OF 32