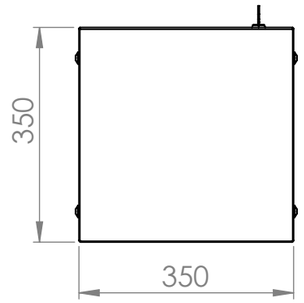

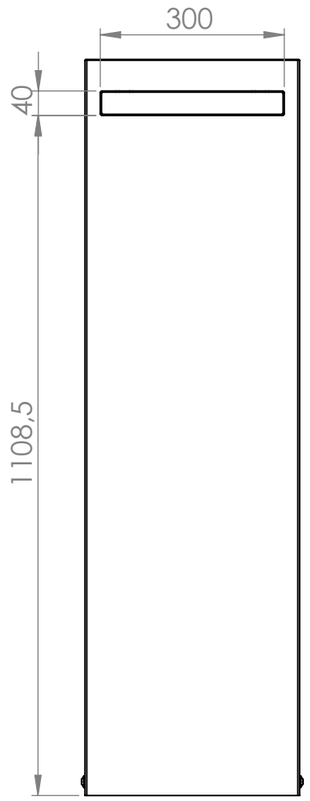

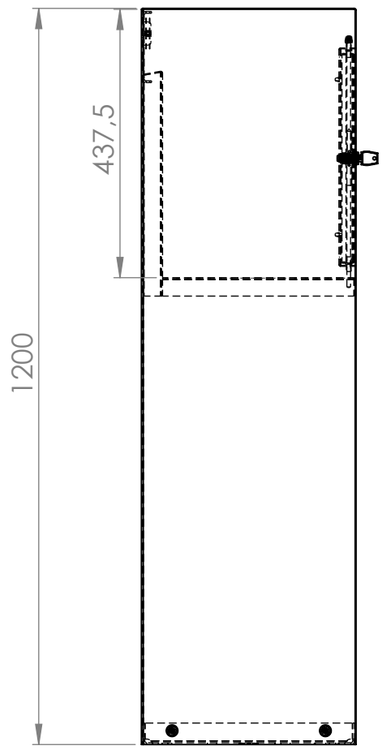

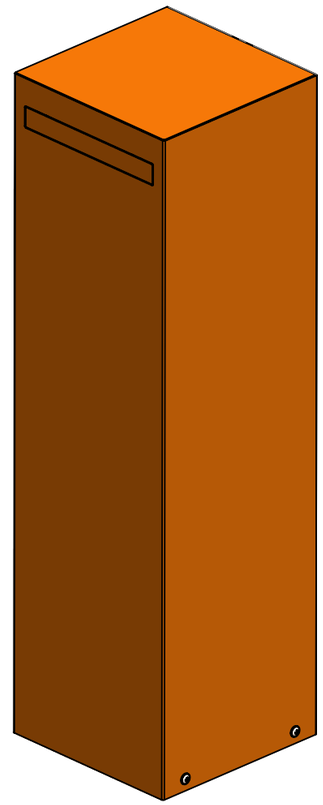

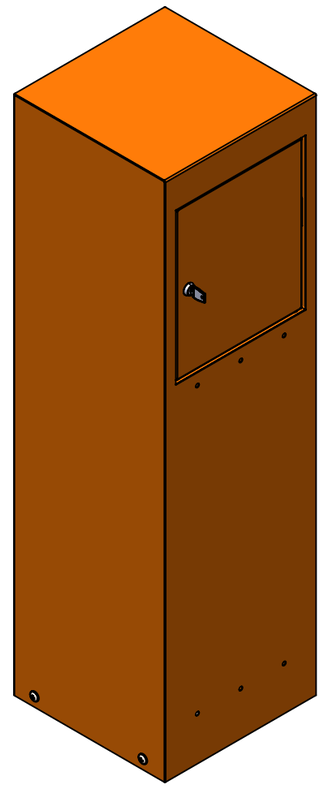

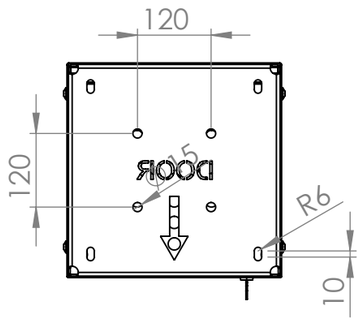

		DATE
DRAWN	Luuk van den Heuvel	2-5-2024
REVISION	Dorus Bannenberg	24-12-2024

TITLE:

1.5mm Corten

Drawing.

SCNOC1.2

A3

Color: -

Mass (kg): **29.23**

SCALE:1:10

SHEET 1 OF 20