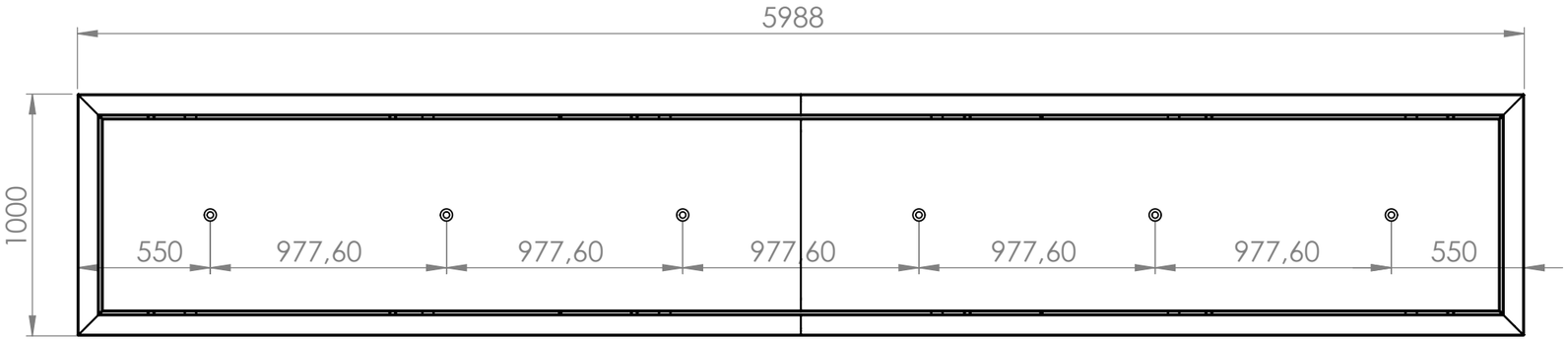

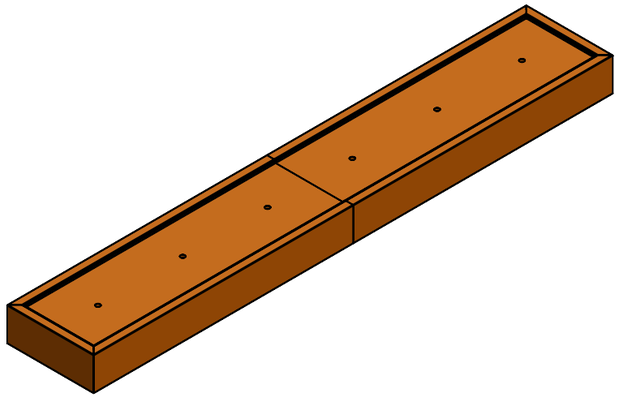

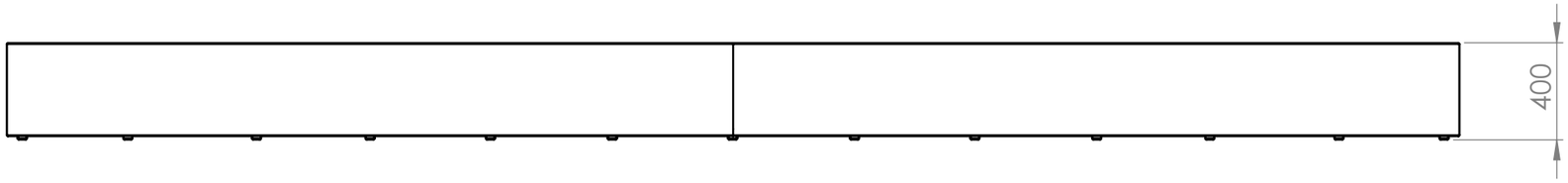

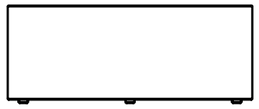

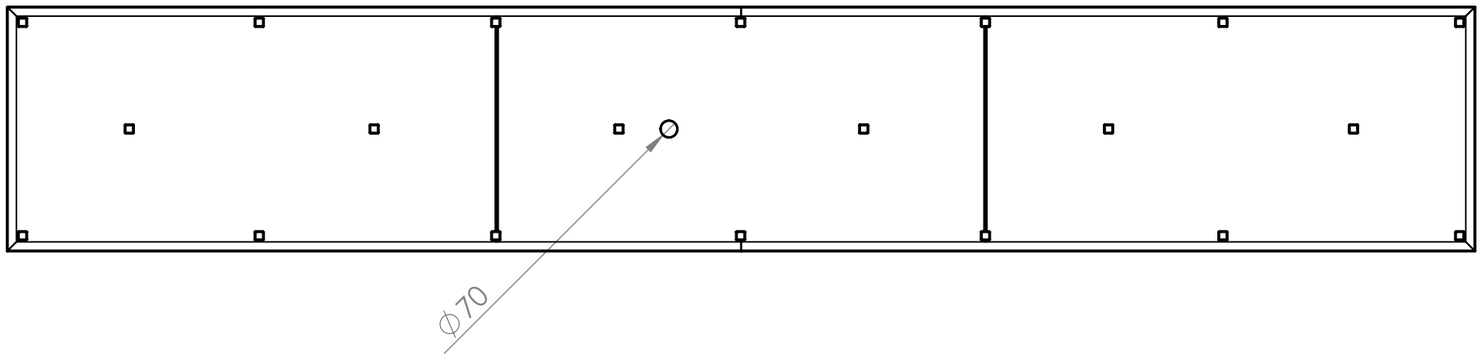

		DATE
DRAWN	Joris Koppens	10-10-2019
REVISION	Dorus Bannenberg	28-6-2023

TITLE:

3mm Corten

Drawing.

SCCB1. 6000x1000x400

A3

Color: -

Mass (kg): **451.21**

SCALE:1:25

SHEET 1 OF 26

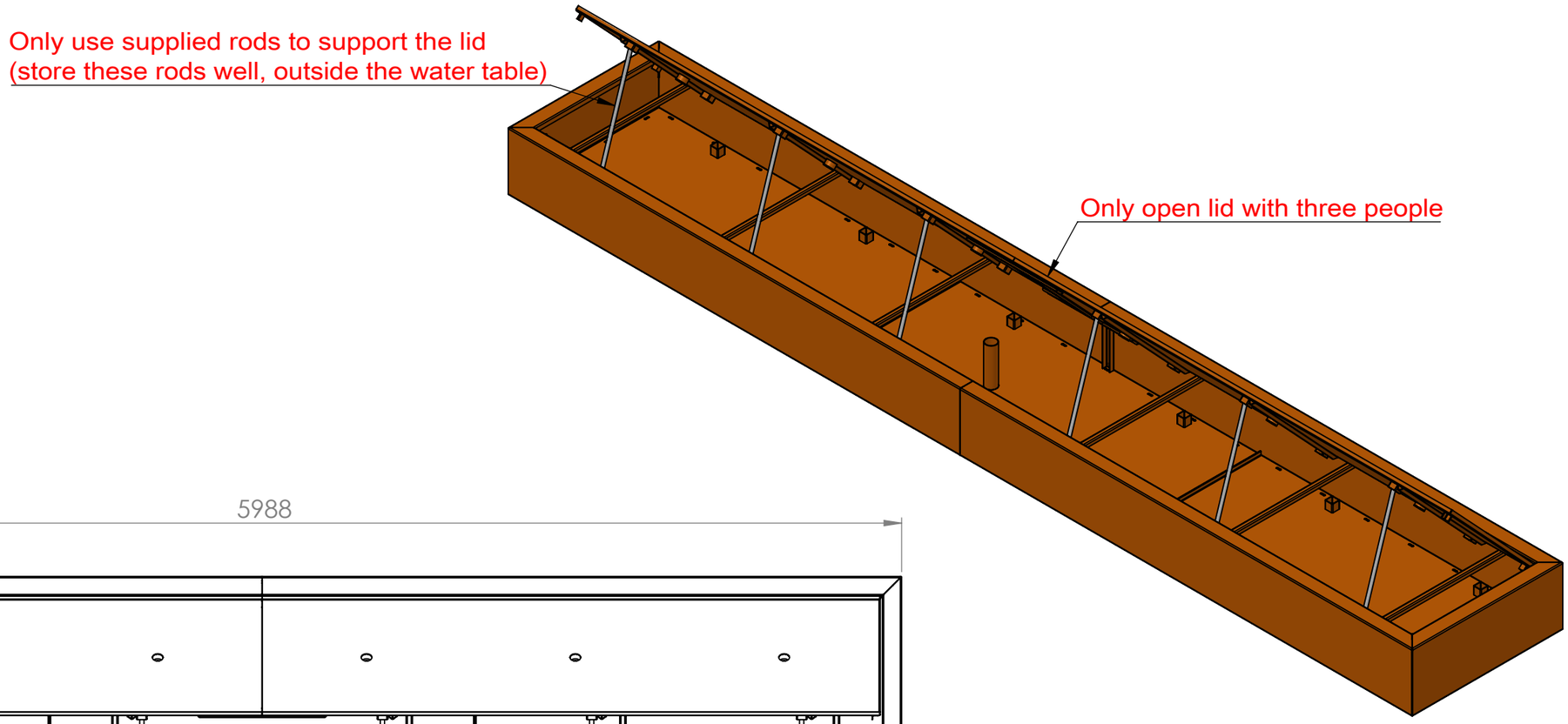

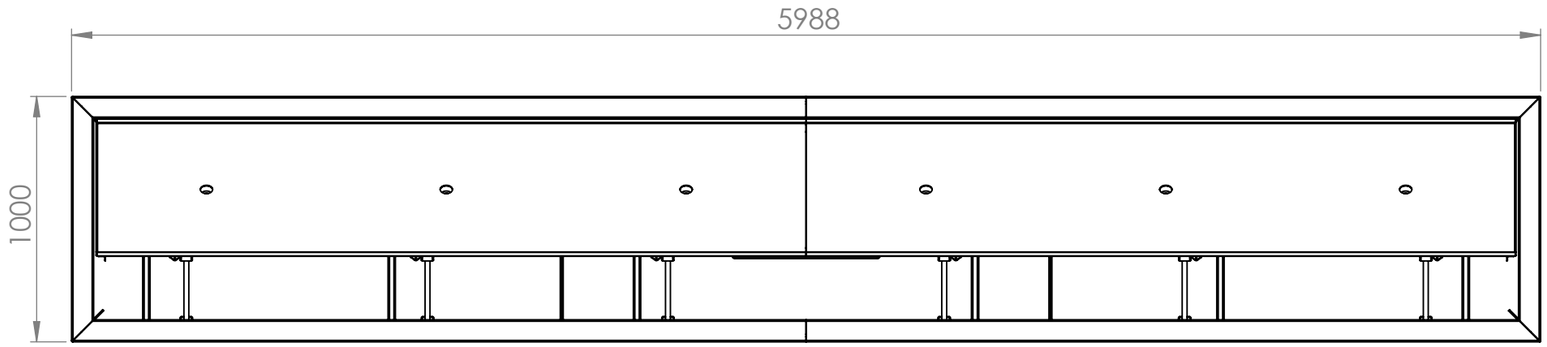

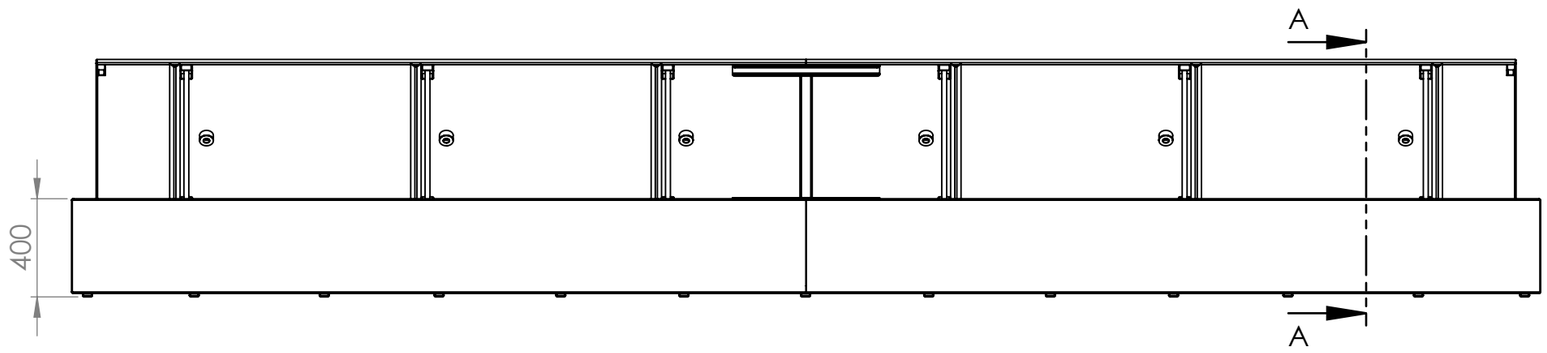

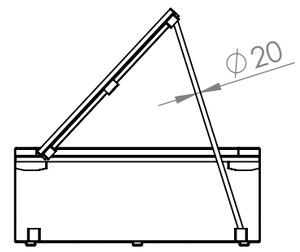

SECTION A-A

ITEM NO.	PART NUMBER	THICKNESS	DESCRIPTION	QTY.
1	SCCB1. Base	3 mm	Corten	1
2	SCCB1. Cover	3 mm	Corten	1
3	SCCB1.-Support 3			6

		DATE
DRAWN	Joris Koppens	10-10-2019
REVISION	Dorus Bannenberg	28-6-2023

TITLE:

3mmCorten

Drawing.

SCCB1. 6000x1000x400

A3

Color: -

Mass (kg): **451.21**

SCALE:1:25

SHEET 2 OF 26