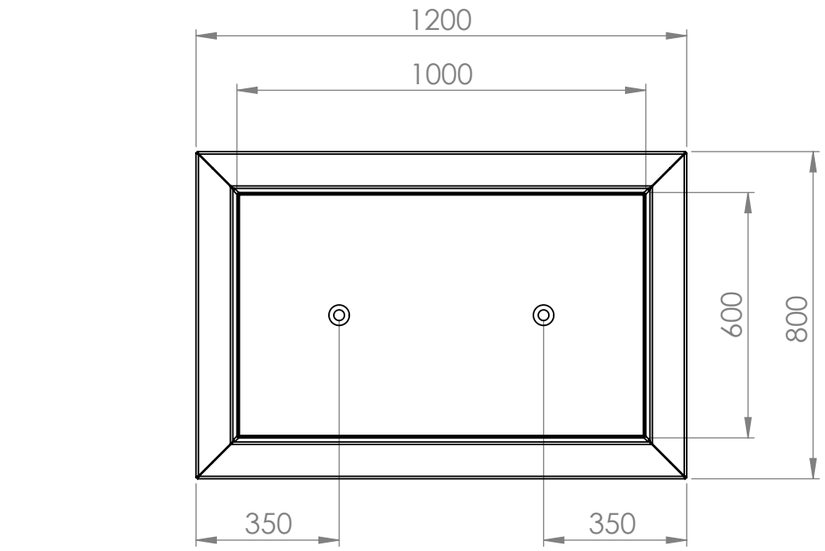

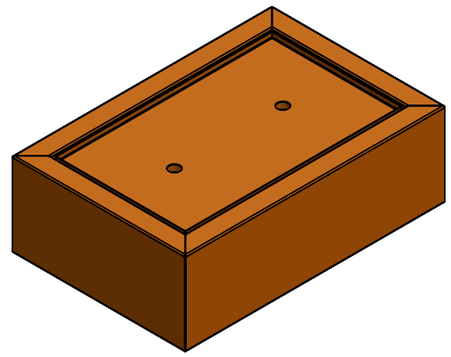

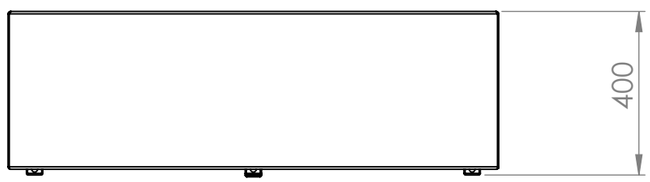

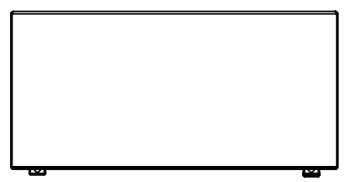

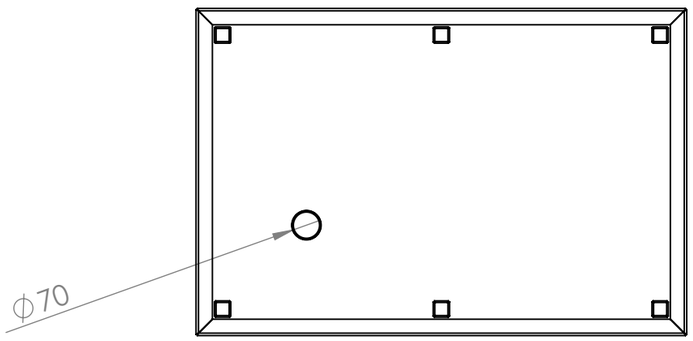

		DATE
DRAWN	Joris Koppens	10-10-2019
REVISION	Dorus Bannenberg	15-6-2023

TITLE:

3mm Corten

Drawing.

SCCB7.1 1200x800x400

A3

Color: -

Mass (kg): **87.92**

SCALE:1:15

SHEET 1 OF 14