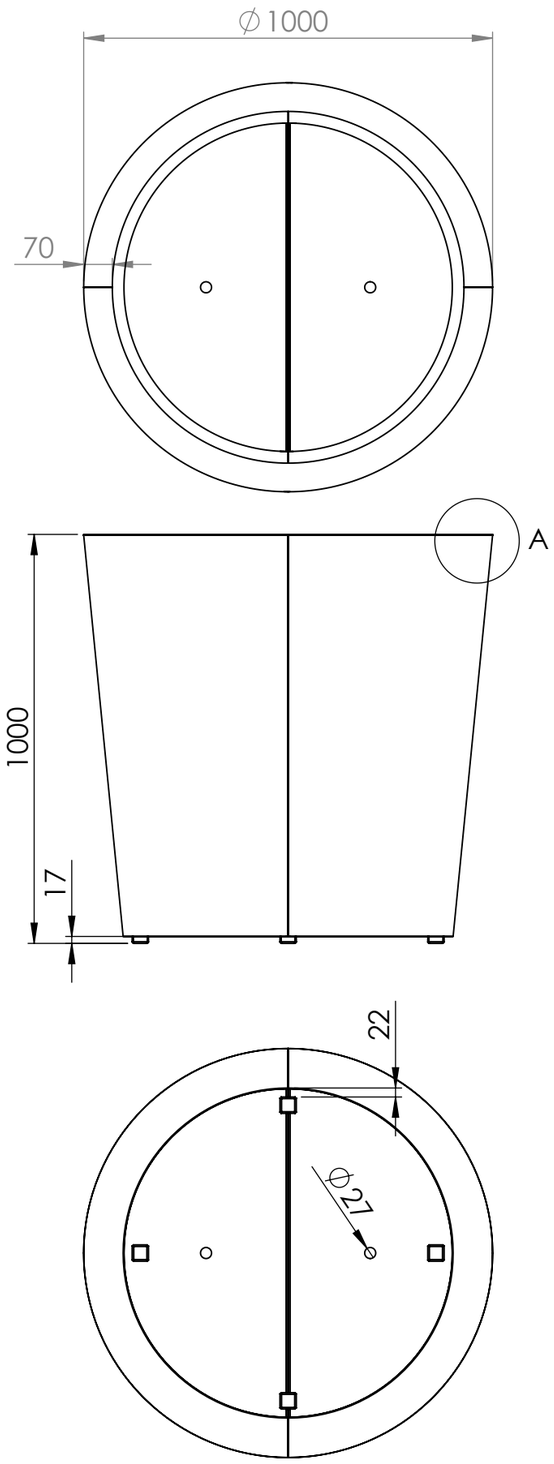

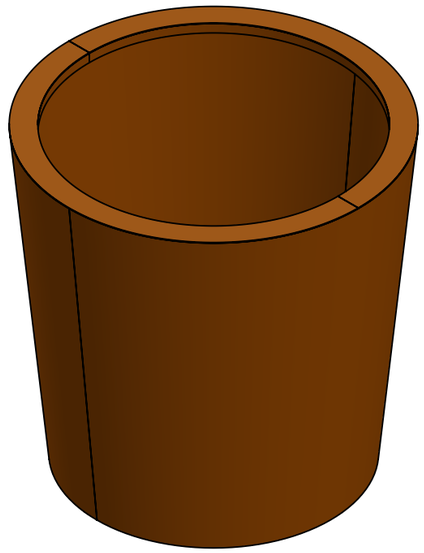

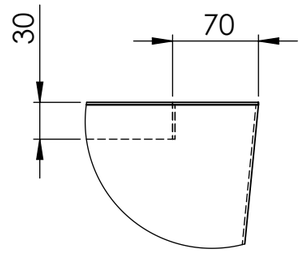

DETAIL A
SCALE 1 : 5

		DATE
DRAWN	Benny Dijkhuis	5-11-2019
REVISION	Benny Dijkhuis	3-2-2022

TITLE:

2mm Corten

Drawing.

SCCC5 1000x1000

A3

Color: -

Mass (kg): **56.29**

SCALE:1:15

SHEET 1 OF 7